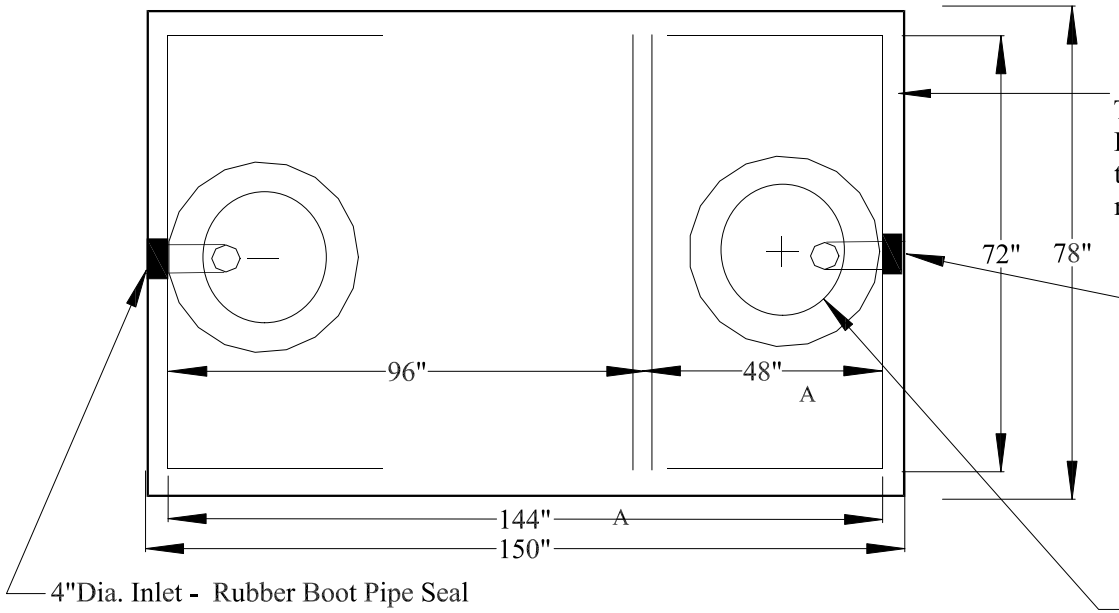

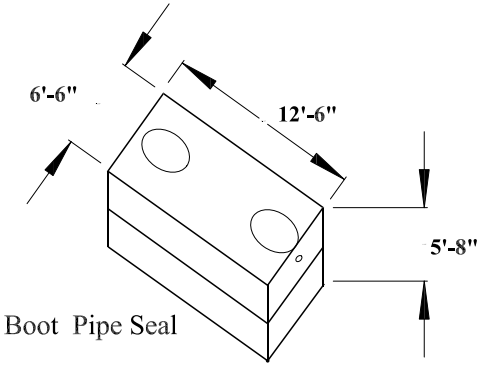

ASSEMBLED TANK

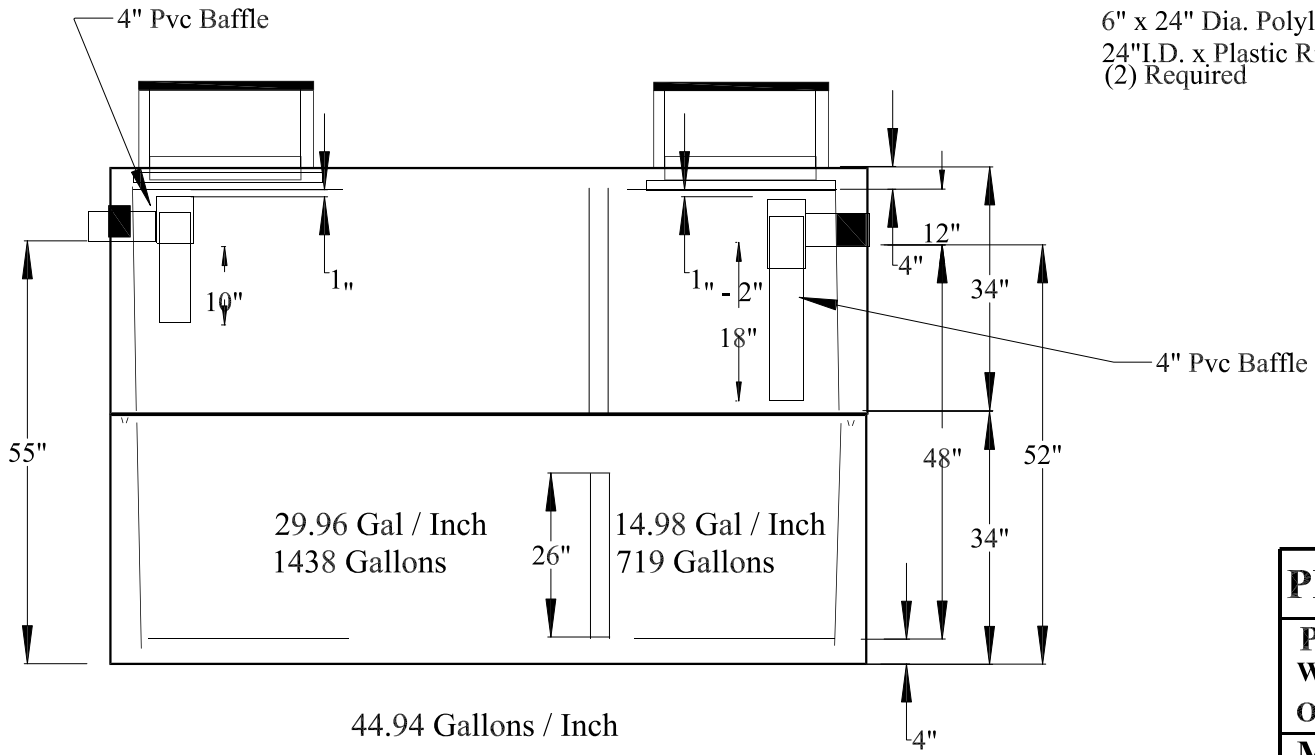

DATE	REV.	LOC.	DESCRIPTION
08/18/25	A		Updated Drawing per Reis Tank
08/05/25	A		shown Partition location correction & Calc.

PEPCON WEST MILTON PRECAST

P. O. BOX 159, WEST MILTON, OH 45383
WEST MILTON PHONE: (937) 698-4181
OHIO WATS PHONE: (800) 762-4066

MODEL: 2000 GALLON TANK

MATERIAL: VIBRATED CONCRETE REINFORCED W/ 6X6" 6/6 WIRE MESH & #4 (1/2") REBAR

SCALE: 3/8" = 1'-0" UNLESS OTHERWISE NOTED

DR. BY: RVA | **DATE: 12/23/2024**

DWG. No: 01-2000DC-A01 | **SHEET 1 OF 1**